SUMMERSET

36" American Muscle Grill

Model	AMG36
Cutout Dimensions*	W35" x H15" x D25"
Overall Dimensions**	W37" x H33" x D33 1/4"
Material	#304 Stainless Steel
Burner Count	5 Main Burners
Total BTU	110,000 BTU
Total Cooking Surface	1,105 sq. in.
Gas Inlet NG	1/2" NPT Female Regulator
Gas Inlet LP	3/8" Flared Male Fitting
Electric Supply	120 VAC, 60 HZ - **Input**
	12 VAC, 5000 mA, 60W - **Output**
Power Cord Length	13 ft. : 77" Power Cord
	+ 80" Transformer Wire

*** Manufacturer Suggested Cutout Dimensions**

**** Manufacturer Approximate Overall Dimensions**

NOTES

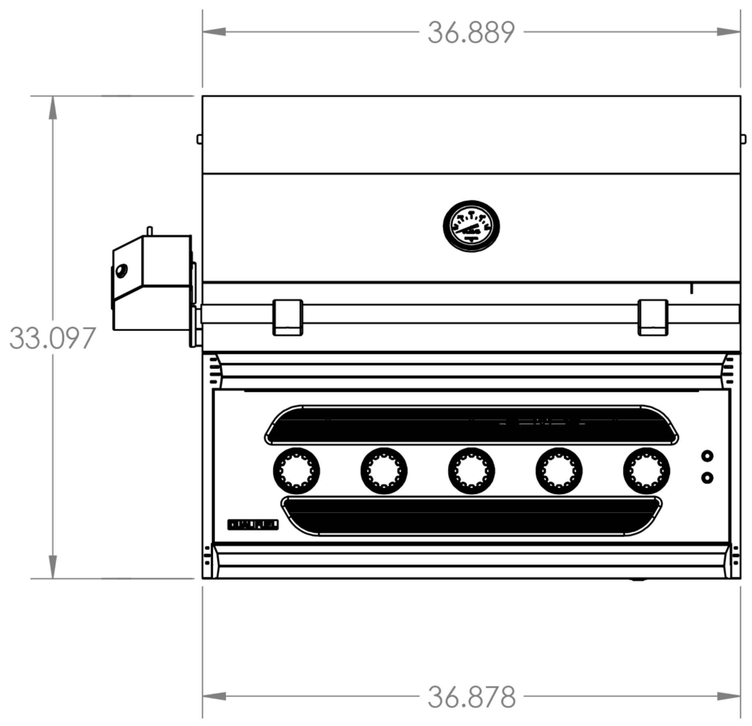

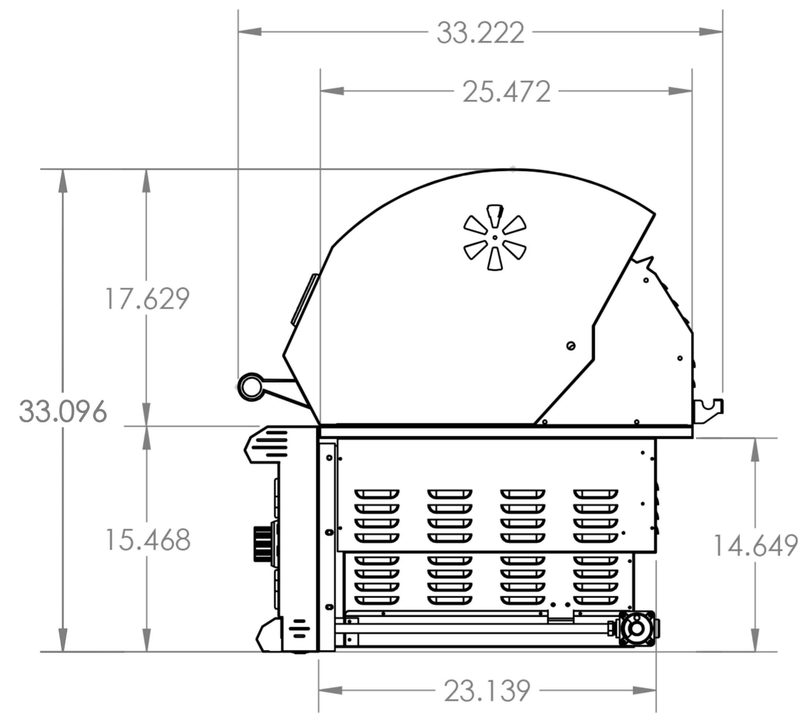

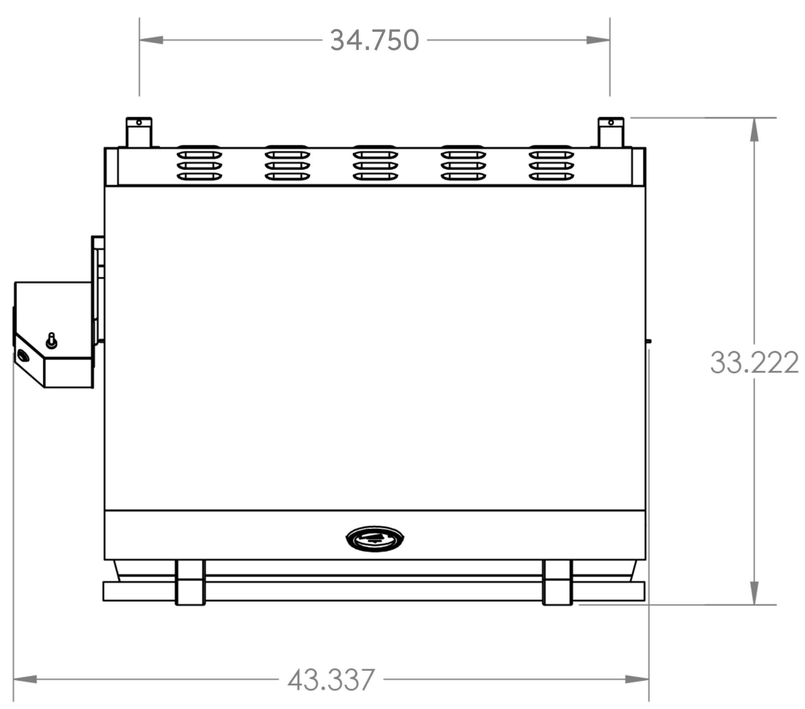

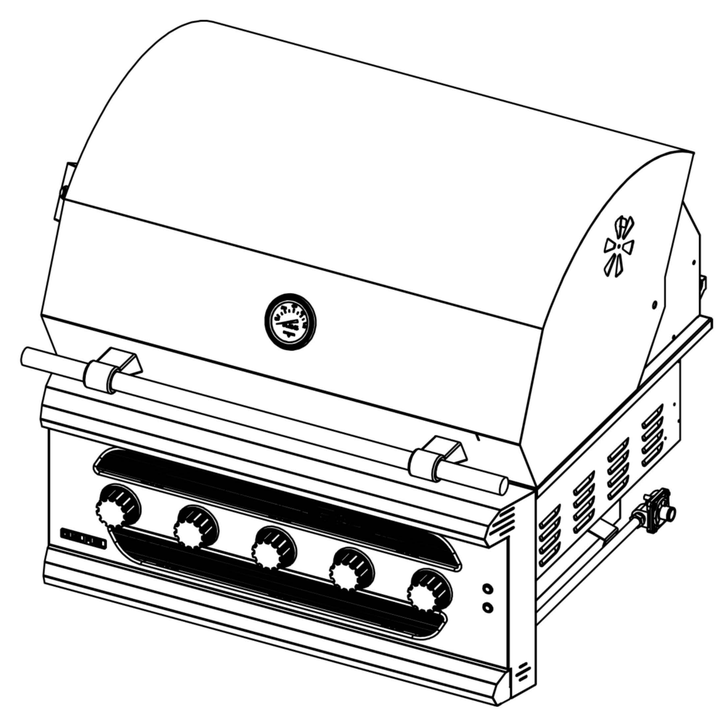

Suggested Cutout Dimensions*
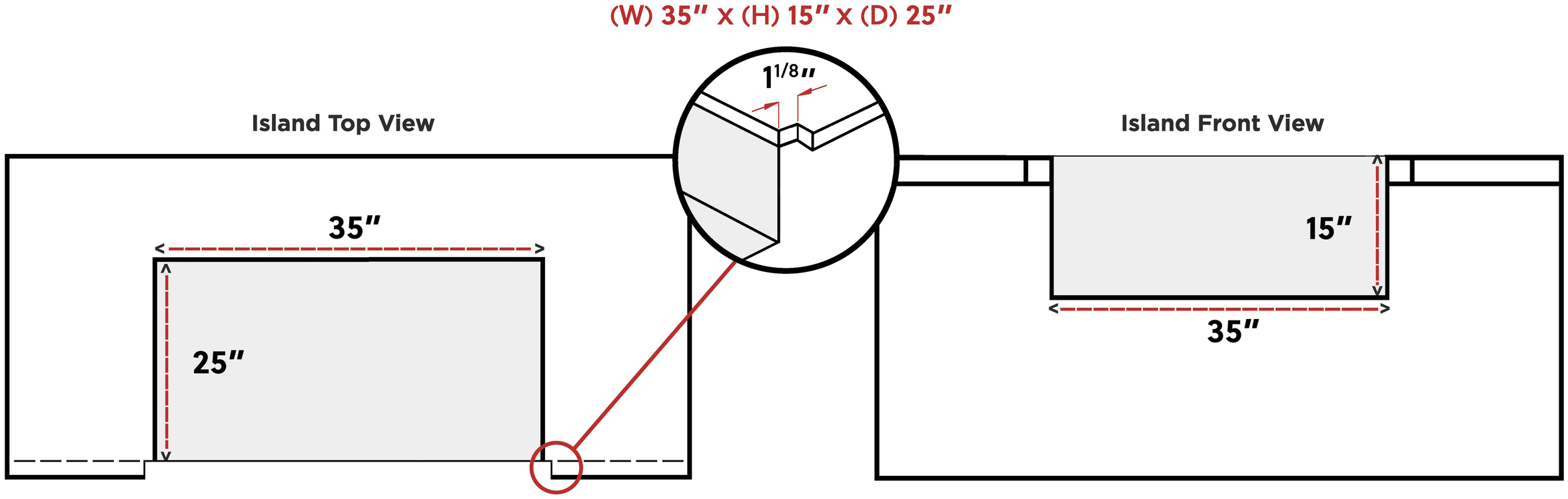
(W) 35" x (H) 15" x (D) 25"