The Vail Series
Vent-Free Gas Fireplaces

Vail 32 in a Standard Dark Oak Mantel with Base, trimmed with Polished Brass

Warm Up To White Mountain Hearth

Vail 32 in a White Universal Full Mantel with Base, trimmed with Stainless Steel and surrounded by Black Laminate

For quality, value, and selection, the White Mountain Hearth collection offers more of everything you're looking for in an attractive, energy-efficient fireplace.

The Vail Collection: Complete Fireplace Systems

Vail Vent-Free Fireplaces are simple, elegant, and complete. The Vail includes our exclusive Slope Glaze Burner and Charred Oak Log Set. A one-piece rigid screen, mounted in a stylishly arched frame, covers the hearth opening. Louvers at the top and bottom help circulate the warmed air, and all controls are discreetly concealed behind the lower louvers.

- **The Vail fireplace can be installed in new or existing construction to gain the comfort and efficiency of a vent-free gas fireplace.**
- **The concrete and ceramic brick liners, optional on some models, enhance the built-in look.**
- **Vail Fireplaces fit our all-new White Mountain Hearth Standard Mantels.**

Vail 32 Vent-Free Fireplace with standard Charred Oak Log Set, flat black louvers, hood, frame, and optional ceramic aged brick liner.

Sizes for any room

Vail fireplaces come in three widths – 20, 32, and 36 inches. The Vail 20 measures 11 inches deep, while the Vail 32 and 36 are both 14 inches deep.

Options & Accessories

Customize your new fireplace or firebox with louvers, matching frame, and hood – in brass, high-gloss black, or stainless steel. These accessories are sold separately, so you can create the look that's right for your room. Select all brass or all high-gloss black for formal settings, or accent the standard flat-black frame and hood with stainless steel louvers to make a bold modern statement.

Flat Black Trim (Shown with Emerald Laminate on Cherry Universal Mantel)

Polished Brass Trim (Shown on Dark Oak Standard Mantel)

Gloss Black Trim (Shown on Oak Standard Mantel)

Stainless Steel Trim (Shown with Black Marble Laminate on White Universal Mantel)

Complement your décor with our cherry, oak, dark oak, or white finish. For that custom installation, mantels are available unfinished in oak or hardwood.

An integrated oxygen depletion sensor instantly shuts off the system well before room oxygen levels drop to unsafe levels.

Single-speed or variable-speed blowers help circulate the warmed air throughout the room.

White Mountain Hearth crafts wood mantels to fit all our Vail fireplaces. For complete mantel specifications, see our mantel brochure.

History & Art Come Together

Empire Comfort Systems, Inc. has manufactured safe, reliable heating systems for more than 70 years.

We take pride in our reputation for quality products, backed by the best sales, service, and distribution network in this industry. The White Mountain Hearth Series combines our proven technologies with exceptional artistry and craftsmanship to add beauty and warmth to any home.

Fireplace Dimensions

(All measurements in inches)

	VFHS-20	VFHD-32	VFHD-36
A	22 3/4	35	39
B	17 1/4	28	32
C	11	16 1/2	16 1/2
D		37	39
E	26 1/2	34	36

Vail 20 Fireplace System with Cherry Mantel

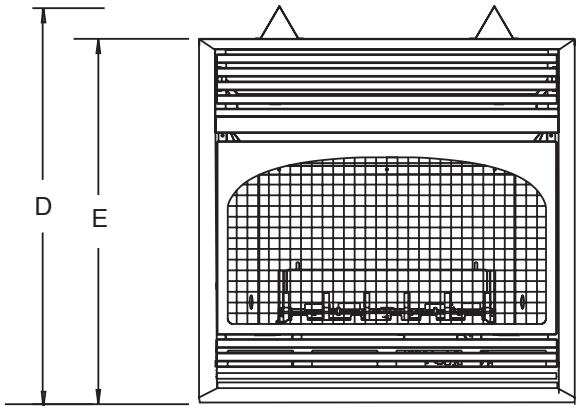

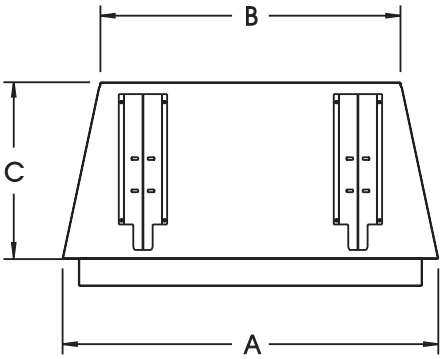

Vail 20 Vent-Free Fireplaces, Mantels, & Accessories

Model	Description	Btu Input
VFHS-20/10T	Vail 20/10 with Modulating Hydraulic Thermostat and additional orifice to convert to 10,000 Btu	20,000/10,000
VFHS-20R	Vail 20 with On/Off Millivolt (remote capable)	20,000

Fireplace Accessories		Control Accessories (To fit VFHS-20R Only)	
VFS-BK	Single-speed Automatic Blower Kit	GWSG-T	Wall thermostat (Millivolt)
EHL-24-1	Ceramic Brick Liner	TMV	Wall thermostat (Millivolt - Reed Switch)
VPP1A-22	Ceramic Aged Brick Liner	FRBC	Battery Operated Remote Control
		FRBTC	Battery Operated Remote Control with Thermostat
		FREC	Electric Remote Control
		FWS-1	Wall Switch
		TRW	Wireless Remote Wall Thermostat

Standard Equipment

The VFHS-20/10T and the VFHS-20R come standard with flat-black louvers, polished brass frame, and the Slope Glaze Burner System.
The VFHS-20/10T includes a replacement orifice to convert the burner to 10,000 Btu.

Full Cabinet Mantel with Base (38 1/2-inch W x 38 1/2-inch H x 24 1/8-inch D)		Corner Cabinet Mantel with Base (42 1/2-inch W x 38 1/2-inch H x 41 11/16-inch D)	
EMF-22W	White	EMC-22W	White
EMF-22O	Oak Finish	EMC-22O	Oak Finish
EMF-2DO	Dark Oak Finish	EMC-22DO	Dark Oak Finish
EMF-22C	Cherry Finish	EMC-22C	Cherry Finish
EMF-22UH	Unfinished Hardwood	EMC-22UH	Unfinished Hardwood
EMF-22UO	Unfinished Oak	EMC-22UO	Unfinished Oak

Vail 32 Vent-Free Fireplaces, Accessories & Mantels

Model	Description	Btu Input
VFHD-32T	Vail 32 Fireplace with Modulating Hydraulic Thermostat	30,000
VFHD-32TV	Vail 32 Fireplace with Modulating Hydraulic Thermostat & Variable-Speed Blower	30,000
VFHD-32R	Vail 32 Fireplace with On/Off Millivolt (remote capable)	30,000
VFHD-32RV	Vail 32 Fireplace with On/Off Millivolt (remote capable) & Variable-Speed Blower	30,000

Fireplace and Firebox Accessories		Control Accessories (to fit VFHD-32R & VFHD-32RV)	
FBB3A	Variable-speed Automatic Blower Kit	**GWSG-T**	Wall thermostat (Millivolt)
FBB2A	Single-speed Automatic Blower Kit	**TMV**	Wall thermostat (Millivolt - Reed Switch)
EK-1	Embers Kit	**FRBC**	Battery Operated Remote Control
VFP2A-32SSA	Ceramic Aged Brick Liner	**FRBTC**	Battery Operated Remote Control with Thermostat
		FREC	Electric Remote Control
		FWS-1	Wall Switch
		TRW	Wireless Remote Wall Thermostat

Vail 32: Louvers, Frames, and Hoods

Finish	Louver	Hood	Frames
Flat Black	Standard	Standard	Standard
High-Gloss Black	FBL2A-32BP	VF2H2A-32BP	VFF2A-32SBP
Polished Brass	FBL2A-32BR	VF2H2A-32BR	VFF2A-32SBR
Stainless Steel	FBL2A-32SS	VF2H2A-32SS	VFF2A-32SSS

Standard Equipment

VFHD-32 comes standard with the Slope Glaze Burner System with Charred Oak Log Set and includes flat-black louvers and standard hood.

Standard and Universal Mantels to fit Vail 32

Standard Full Mantel with Integral Base to fit VFHD-32	
EMBF-32-C	Cherry Finish
EMBF-32-O	Oak Finish
EMBF-32-DO	Dark Oak Finish
EMBF-32-W	White Finish
EMBF-32-UO	Unfinished Oak
EMBF-32-UH	Unfinished Hardwood

Universal Full Cabinet Mantel (Short Shallow) to fit VFHD-32		Base for Full Mantel
UMF-32SS-C	Cherry Finish	**UBF-3236S-C**
UMF-32SS-O	Oak Finish	**UBF-3236S-O**
UMF-32SS-DO	Dark Oak Finish	**UBF-3236S-DO**
UMF-32SS-W	White Finish	**UBF-3236S-W**
UMF-32SS-UO	Unfinished Oak	**UBF-3236S-UO**
UMF-32SS-UH	Unfinished Hardwood	**UBF-3236S-UH**

Universal Flush Mantel (Short) to fit VFHD-32		Base for Flush Mantel
UMFL-32S-C	Cherry Finish	**UBFL-3236-C**
UMFL-32S-O	Oak Finish	**UBFL-3236-O**
UMFL-32S-DO	Dark Oak Finish	**UBFL-3236-DO**
UMFL-32S-W	White Finish	**UBFL-3236-W**
UMFL-32S-UO	Unfinished Oak	**UBFL-3236-UO**
UMFL-32S-UH	Unfinished Hardwood	**UBFL-3236-UH**

Universal Laminates for front of Full, Flush, and Corner Mantels			Laminates for Mantel Base	
Std Laminate	Laminate w/Edge*	Laminate Color	Full/Flush Mantel Base	Corner Mantel Base
UMT-32T-E	**UMTE-32T-E**	Marbled Emerald	**UBFT-3236-E**	**UBCT-3236-E**
UMT-32T-P	**UMTE-32T-P**	Parchment	**UBFT-3236-P**	**UBCT-3236-P**
UMT-32T-B	**UMTE-32T-B**	Marbled Black	**UBFT-3236-B**	**UBCT-3236-B**

* Laminate with edge may be installed without a fireplace frame where appropriate

Universal Corner Mantel (Short) to fit VFHD-32		Base for Corner Mantel
UMC-32S-C	Cherry Finish	**UBC-3236-C**
UMC-32S-O	Oak Finish	**UBC-3236-O**
UMC-32S-DO	Dark Oak Finish	**UBC-3236-DO**
UMC-32S-W	White Finish	**UBC-3236-W**
UMC-32S-UO	Unfinished Oak	**UBC-3236-UO**
UMC-32S-UH	Unfinished Hardwood	**UBC-3236 UH**

Laminates for front of Universal Full, Flush, and Corner Mantels			Laminates for Mantel Base	
Std Laminate	Laminate w/Edge*	Laminate Color	Full/Flush Mantel Base	Corner Mantel Base
UMT-32T-E	**UMTE-32T-E**	Marbled Emerald	**UBFT-3236-E**	**UBCT-3236-E**
UMT-32T-P	**UMTE-32T-P**	Parchment	**UBFT-3236-P**	**UBCT-3236-P**
UMT-32T-B	**UMTE-32T-B**	Marbled Black	**UBFT-3236-B**	**UBCT-3236-B**

* Laminate with edge may be installed without a fireplace frame where appropriate

Vail 36 Vent-Free Fireplaces, Accessories & Mantels

Model	Description	Btu Input
VFHD-36T	Vail 36 Fireplace with Modulating Hydraulic Thermostat	36,000
VFHD-36TV	Vail 36 Fireplace with Modulating Hydraulic Thermostat & Variable-Speed Blower	36,000
VFHD-36R	Vail 36 Fireplace with On/Off Millivolt (remote capable)	36,000
VFHD-36RV	Vail 36 Fireplace with On/Off Millivolt (remote capable) & Variable-Speed Blower	36,000

Fireplace and Firebox Accessories		Control Accessories (to fit VFHD-36R & VFHD-36RV)	
FBB3A	Variable-speed Automatic Blower Kit	**GWSG-T**	Wall thermostat (Millivolt)
FBB2A	Single-speed Automatic Blower Kit	**TMV**	Wall thermostat (Millivolt - Reed Switch)
EK-1	Embers Kit	**FRBC**	Battery Operated Remote Control
VFP2A-36SSA	Ceramic Aged Brick Liner for Deluxe Fireplace	**FRBTC**	Battery Operated Remote Control with Thermostat
		FREC	Electric Remote Control
		FWS-1	Wall Switch
		TRW	Wireless Remote Wall Thermostat

Vail 36: Louvers, Frames, and Hoods

Finish	Louver	Hood	Frames
Flat Black	Standard	Standard	Standard
High-Gloss Black	**FBL2A-36BP**	**VF2H2A-36BP**	**VFF2A-36SBP**
Polished Brass	**FBL2A-36BR**	**VF2H2A-36BR**	**VFF2A-36SBR**
Stainless Steel	**FBL2A-36SS**	**VF2H2A-36SS**	**VFF2A-36SSS**

Standard Equipment

VFHD-36 comes standard with the Slope Glaze Burner System with Charred Oak Log Set and includes flat-black louvers and hood.

Vail 32 in Standard Oak (light) Mantel, trimmed with Polished Brass

Standard and Universal Mantels to fit Vail 36

Standard Full Mantel with Intergral Base to fit VFHD-36	
EMBF-36S-C	Cherry Finish
EMBF-36S-O	Oak Finish
EMBF-36S-DO	Dark Oak Finish
EMBF-36S-W	White Finish
EMBF-36S-UO	Unfinished Oak
EMBF-36S-UH	Unfinished Hardwood

Universal Full Cabinet Mantel (Short Shallow) to fit VFHD-36		Base for Full Mantel
UMF-36SS-C	Cherry Finish	**UBF-3236S-C**
UMF-36SS-O	Oak Finish	**UBF-3236S-O**
UMF-36SS-DO	Dark Oak Finish	**UBF-3636S-DO**
UMF-36SS-W	White Finish	**UBF-3236S-W**
UMF-36SS-UO	Unfinished Oak	**UBF-3236S-UO**
UMF-36SS-UH	Unfinished Hardwood	**UBF-3236S-UH**

Universal Full Cabinet Mantel (Short Deep) to fit VFHD-36		Base for Full Mantel
UMF-36SD-C	Cherry Finish	**UBF-3236D-C**
UMF-36SD-O	Oak Finish	**UBF-3236D-O**
UMF-36SD-DO	Dark Oak Finish	**UBF-3236D-DO**
UMF-36SD-W	White Finish	**UBF-3236D-W**
UMF-36SD-UO	Unfinished Oak	**UBF-3236D-UO**
UMF-36SD-UH	Unfinished Hardwood	**UBF-3236D-UH**

Universal Flush Mantel (Short) to fit VFHD-36		Base for Flush Mantel
UMFL-36S-C	Cherry Finish	**UBFL-3236-C**
UMFL-36S-O	Oak Finish	**UBFL-3236-O**
UMFL-36S-DO	Dark Oak Finish	**UBFL-3236-DO**
UMFL-36S-W	White Finish	**UBFL-3236-W**
UMFL-36S-UO	Unfinished Oak	**UBFL-3236-UO**
UMFL-36S-UH	Unfinished Hardwood	**UBFL-3236 UH**

Universal Corner Mantel (Short) to fit VFHD-36		Base for Corner Mantel
UMC-36S-C	Cherry Finish	**UBC-3236-C**
UMC-36S-O	Oak Finish	**UBC-3236-O**
UMC-36S-DO	Dark Oak Finish	**UBC-3236-DO**
UMC-36S-W	White Finish	**UBC-3236-W**
UMC-36S-UO	Unfinished Oak	**UBC-3236-UO**
UMC-36S-UH	Unfinished Hardwood	**UBC-3236-UH**

Laminates for front of Universal Full, Flush, and Corner Mantels			Laminates for Mantel Base	
Std Laminate	Laminate w/Edge*	Laminate Color	Full/Flush Mantel Base	Corner Mantel Base
UMT-36T-E	**UMTE-36T-E**	Marbled Emerald	**UBFT-3236-E**	**UBCT-3236-E**
UMT-36T-P	**UMTE-36T-P**	Parchment	**UBFT-3236-P**	**UBCT-3236-P**
UMT-36T-B	**UMTE-36T-B**	Marbled Black	**UBFT-3236-B**	**UBCT-3236-B**
* Laminate with edge may be installed without a fireplace frame where appropriate				

For complete specifications on White Mountain Hearth Mantels, see our Mantels brochure

Furniture-grade cabinetry components and 3/4-inch real wood moldings ensure lasting beauty

Empire's craftsmen (and women) build each mantel from 3/4-inch fine-furniture grade cabinetry components, including select hardwood veneers. Because this natural wood can vary in appearance, we grain-matched the components for each mantel, to ensure you get a great looking mantel.

Each mantel is detailed in matching solid wood trim – in oak or poplar. The full 3/4–inch cove moldings and edge trim add structural integrity. Matching decorative trim pieces – in complementary sizes – add beauty and character.

Empire Comfort Systems

Member of the following industry associations:

This appliance is design-certified to the ANSI standard by:

Warm Up To White Mountain Hearth

Empire Comfort Systems, Inc. • 918 Freeburg Ave. • Belleville, IL 62222-0529
618-233-7420 • 800-851-3153 • FAX 618-233-7097 • 800-443-8648
E-mail: info@empirecomfort.com

Photographs represent Empire Comfort Systems products. The actual flame color and pattern may vary due to air movement, location of the product, climate, and amount and quality of insulation.

WMH-550 3/04

The ECS, Empire Comfort Systems and White Mountain Hearth names and logos are registered U.S. trademarks.